AR-009-432

DSTO-GD-0066

A Protocol Approach for the Assessment of Munition Hazards

M. Chick and L. Barrington

APPROVED FOR PUBLIC RELEASE

DTIC QUALITY INSPECTED 4

© Commonwealth of Australia

DEPARTMENT OF DEFENCE

DEFENCE SCIENCE AND TECHNOLOGY ORGANISATION

THE UNITED STATES NATIONAL
TECHNICAL INFORMATION SERVICE
IS AUTHORISED TO
REPRODUCE AND SELL THIS REPORT

A Protocol Approach for the Assessment of Munition Hazards

M. Chick and L. Barrington

Weapons Systems Division
Aeronautical and Maritime Research Laboratory

DSTO-GD-0066

ABSTRACT

We describe and illustrate a methodology (or protocol) for assessing the response of munitions to unwanted hazardous stimuli. The approach has resulted from an international collaboration of scientists representing the US, UK, Canada and Australia. Protocols are being devised for the following hazards; cookoff, bullet/fragment impact, shaped charge jet impact, mass detonation and electrostatic discharge. Each protocol is science based and contains a logical decision tree that utilises a hierarchy of small scale test data. The decision tree flow chart leads the user through an ordered, step by step process that assesses the effect of the selected stimulus as it passes through the munition. It shows what information is needed and in what order and is not just a pass/fail test. The protocol approach can examine new weapon designs and candidate purchases to anticipate potential hazard problems as well as ways to mitigate the hazards with existing weapons. Hence it offers an important tool to assist with the bottom line of Insensitive Munition development, i.e., predicting munition vulnerability and hence an assessment of platform vulnerability. The approach is illustrated by an example.

19961217 055

RELEASE LIMITATION

Approved for public release

DEPARTMENT OF DEFENCE

DEFENCE SCIENCE AND TECHNOLOGY ORGANISATION

Published by

DSTO Aeronautical and Maritime Research Laboratory
PO Box 4331
Melbourne Victoria 3001

Telephone: (03) 626 8111
Fax: (03) 626 8999
© Commonwealth of Australia 1995
AR No. 009-432
October 1995

APPROVED FOR PUBLIC RELEASE

A Protocol Approach for the Assessment of Munition Hazards

Executive Summary

We describe and illustrate a methodology (or protocol) for assessing the response of munitions to unwanted stimuli. The approach has resulted from an international collaboration of scientists representing the US, UK, Canada and Australia. Protocols are being devised for the following hazards; cookoff, bullet/fragment impact, shaped charge jet impact, mass detonation and electrostatic discharge. Each protocol is science based and contains a logical decision tree that utilises a hierarchy of small scale test data. The decision tree flow chart leads the user through an ordered, step by step process that assesses the effect of the selected stimulus as it passes through the munition. Because the protocol is concerned with the response of the energetic filling in its munition environment it is designed to take account of the effect of the case characteristics, liner characteristics, internal components (e.g. electronic packages adjacent to the filling) major voids in the filling (e.g. the contraction voids in the Mk 80 bomb series), side confinement, etc. In some steps it may be possible to include empirical or mathematical criteria to assist the analyst in the decision process. Importantly the protocol advises on what information is required, why and when it is required and how it is applied.

The value of the protocol approach is that it can be applied in the early stages of weapon design or modification, to assist the evaluation of proposals for the mitigation of hazards and as a means of evaluating candidate weapons in a purchasing strategy. Thus the capability of the smart buyer is enhanced by allowing a desk-top audit of the potential hazards of contenders in a weapons purchasing strategy. While the protocols will never eliminate the need for experiments, much of the required information can be obtained from small scale tests. Ultimately, when the protocols are sufficiently developed, costly large scale tests may only be necessary for confirmation of protocol assessments of munition response. A suggested role for the protocol in an IM implementation strategy is given in the report. In this proposal the munition design under evaluation is assessed for the likely life cycle hazards. Each of these hazards is subsequently evaluated using the protocol approach. The degree of IM compliance can therefore be estimated for each candidate design change for feeding into the cost/benefit decision making process. The approach allows for an assessment of partial IM compliance, e.g. overcomes the major identified hazard but not the less important hazards.

The report includes examples of a protocol decision tree, a small scale testing heirachy and a list of major technology gaps for a particular hazard. The protocol approach is demonstrated by an example which considers the effect of the impact of a shaped charge jet on a Mk 82 bomb in a seamine configuration.

Contents

1. INTRODUCTION 1

2. THE HAZARD PROTOCOL 2
2.1 Protocol Origins 2
2.2 General Description 2
2.3 Status 5

3. BENEFITS OF THE PROTOCOL APPROACH 6

4. PROTOCOL RELEVANCE TO INSENSITIVE MUNITION DEVELOPMENT 8

5. CONCLUSION 8

6. ACKNOWLEDGEMENTS 9

7. REFERENCES 9

APPENDIX A: EXAMPLE OF PROTOCOL APPLICATION 12
A1. Introduction 12
A.2 Summary of Protocol Predictive Model 12
A.3 Experimental Test Set-Up 16
A.4 Discussion of Protocol Model and Test Results 16

1. Introduction

Australia has adopted an Insensitive Munitions (IM) policy [1] and Defence Instruction (General) DI (G) LOG 07-10 [2] sets in train the implementation strategy. The DI(G) states that:

"IM are to be introduced into Service with the Australian Defence Organisation, where it is sensible, practicable and cost-effective to do so... All further procurement of Defence explosive ordnance should meet the applicable Insensitive Munitions criteria at Annex A, subject to consideration of the cost benefits..." [2].

Annex A to the DI(G) lists nine hazardous stimuli to which munitions may be exposed during the logistic cycle covering both peacetime and war, and provides test specifications and acceptable response criteria for each of these stimuli. This traditional approach to hazard assessment depends on a set of go/no-go (pass/fail) tests and the experience and judgement of cognizant individuals. The interpretation of the results are complicated by the problems associated with the statistical probability of an inadvertent event or reaction. Statistically meaningful testing is normally so costly and time consuming as to be unavailable for most munitions. For these reasons tests are generally designed to demonstrate "safety" to a known stimulus. Indeed the information learned from such testing is very limited since the response gives no indication of how far the stimulus is from the conditions that would produce an undesirably hazardous reaction.

Inevitably the approach places emphasis on large scale tests of major components and/or the full scale munition. Such large scale tests have obvious, severe disadvantages. For example the tests are costly and hence only a few are undertaken, the test design emphasis is on a "pass", the large scale of the tests requires remote locations with limited or no instrumentation to aid diagnostics of an unsuccessful result (violent reaction) and an unacceptable result may lead to a costly redesign with a lead time loss. Hence there is a requirement for a hazard evaluation approach that has the minimum dependence on large scale testing.

The purpose of our paper is to present a protocol approach to munition hazard assessment that has been developed by an international group of scientists. Australia represented by the authors, played a key role in the program and took the lead in one of the threat stimuli. The protocol is based on the response of a munition to a designated stimulus as it propagates through the munition components. The approach is illustrated by an example and the major benefits are summarised. The relevance of the approach to Insensitive Munition (IM) development is included since IM is principally concerned with reduced vulnerability without a loss in munition performance.

2. The Hazard Protocol

2.1 Protocol Origins

The protocol approach to hazard assessment was proposed by Boggs et al [3] and developed by an international group of scientists from the USA, UK, Canada and Australia under the auspices of The Technical Cooperation Program (TTCP) via Subgroup W Action Group 11 (WAG-11) [4]. After considering potentially hazardous stimuli, likely munition responses and influential parameters, WAG-11 set five major hazards for proposed development. These are; bullet/fragment impact, shaped charge jet impact, cookoff, mass reaction of munitions and electrostatic discharge (ESD).

The participating scientists have published various components and forms of the protocols and the associated science in symposia with an enthusiastic response being received from the international defence science and technology community. There are many references, see [3] to [8] as general examples.

2.2 General Description

The main element of the protocol approach is a decision tree that charts the effect of the selected stimulus step by step through the munition under evaluation. The successive steps in the flow chart are built into a logical sequence and related to the likely response(s) of the energetic filling to the stimulus in the munition environment. In this regard the filling covers explosives, solid propellants, propellant beds and pyrotechnics. The organisation of the flow chart is also based on the scientific understanding of the potential stimulus/munition interactive processes. For example, for the bullet/fragment impact hazard, the protocol considers the consequences of whether the projectile impacts and ricochets from the case, penetrates and plugs the case, penetrates the case, liner, etc and lodges in the energetic filling, or penetrates and exits the munition. For the cookoff hazard the protocol follows the effect of the temperature gradient as it builds up in the test components. A flow chart for part of the bullet/fragment protocol is shown in Figure 1 as prepared by James for TTCP WAG-11 in 1992 [4]. Associated with the flow chart are several pages of text which describe the factors considered to be important at each step.

Because the protocol is concerned with the response of the energetic filling in its munition environment it is designed to take account of the effect of the case characteristics, liner characteristics, internal components (e.g. electronic packages adjacent to the filling), major voids in the filling (e.g. the contraction voids in the Mk 80 bomb series), side confinement, etc. In some steps it may be possible to include empirical or mathematical criteria to assist the analyst in the decision process. Importantly the protocol advises on what information is required, why and when it is required and how it is applied. This is illustrated by the rationalisation of small scale test data and leads to a small scale testing schedule; an example is given in Table 1 for the shaped charge jet impact hazard. Note that by inference a testing schedule also advises which test data is likely to be irrelevant for a particular hazard analysis and assists in selecting substitute test data when necessary.

1

An exampl
A. The exa
as a bottom

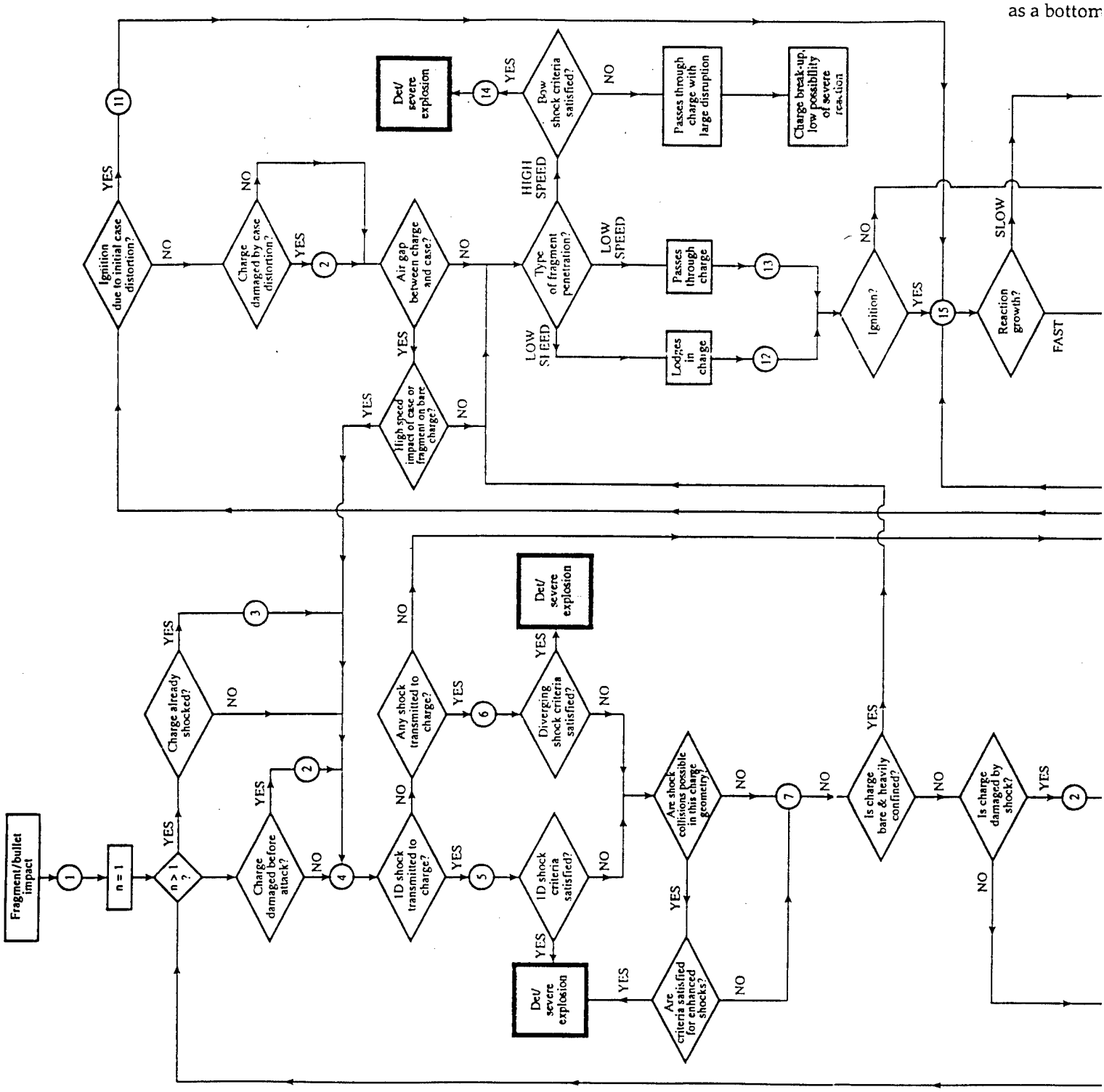

An example of the application of a protocol to a munition system is given as Appendix A. The example applies the shaped charge jet impact protocol to a Mk 82 bomb acting as a bottom laid seamine.

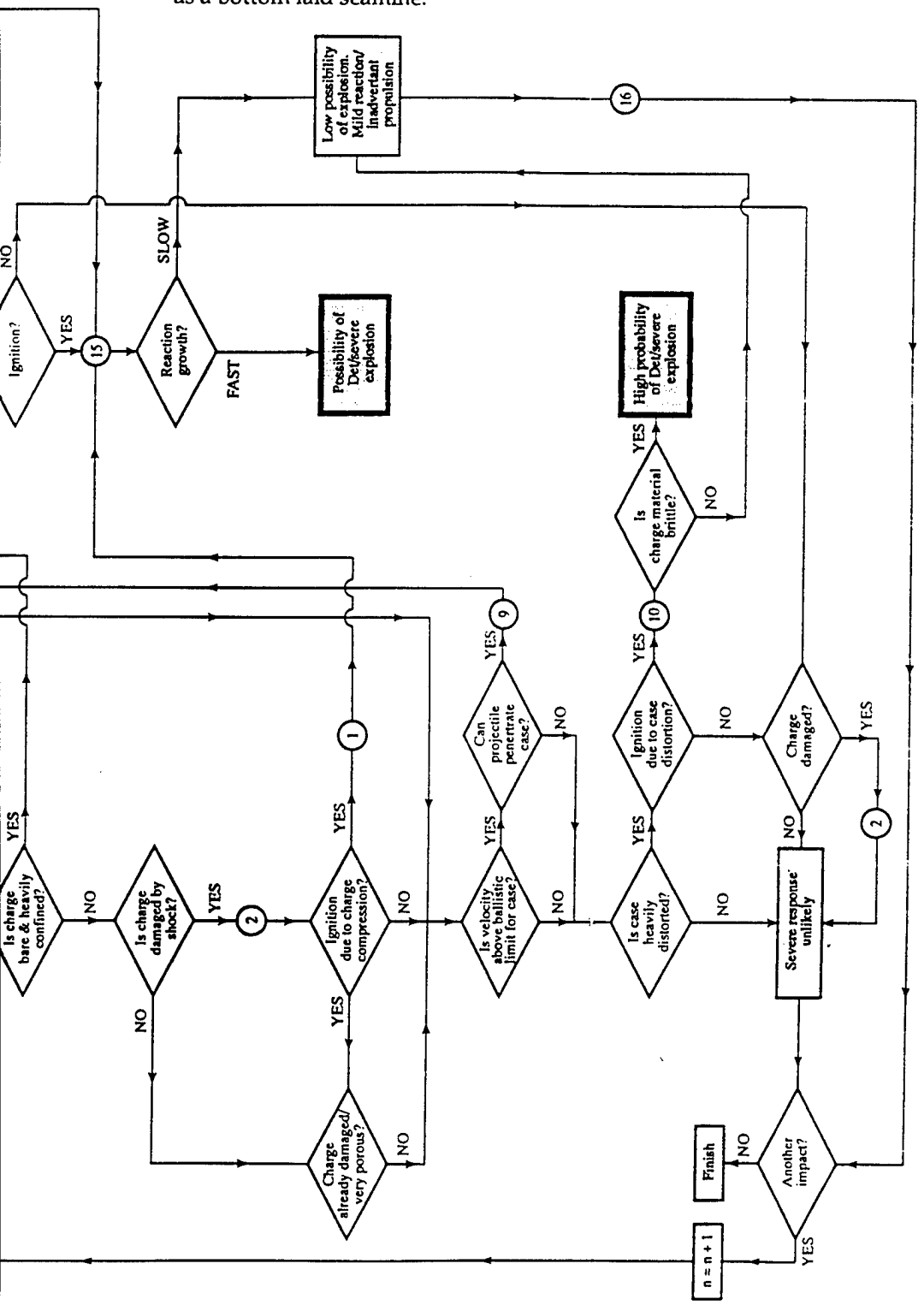

Figure 1: Example of Bullet/Fragment Impact Protocol Flow Chart.

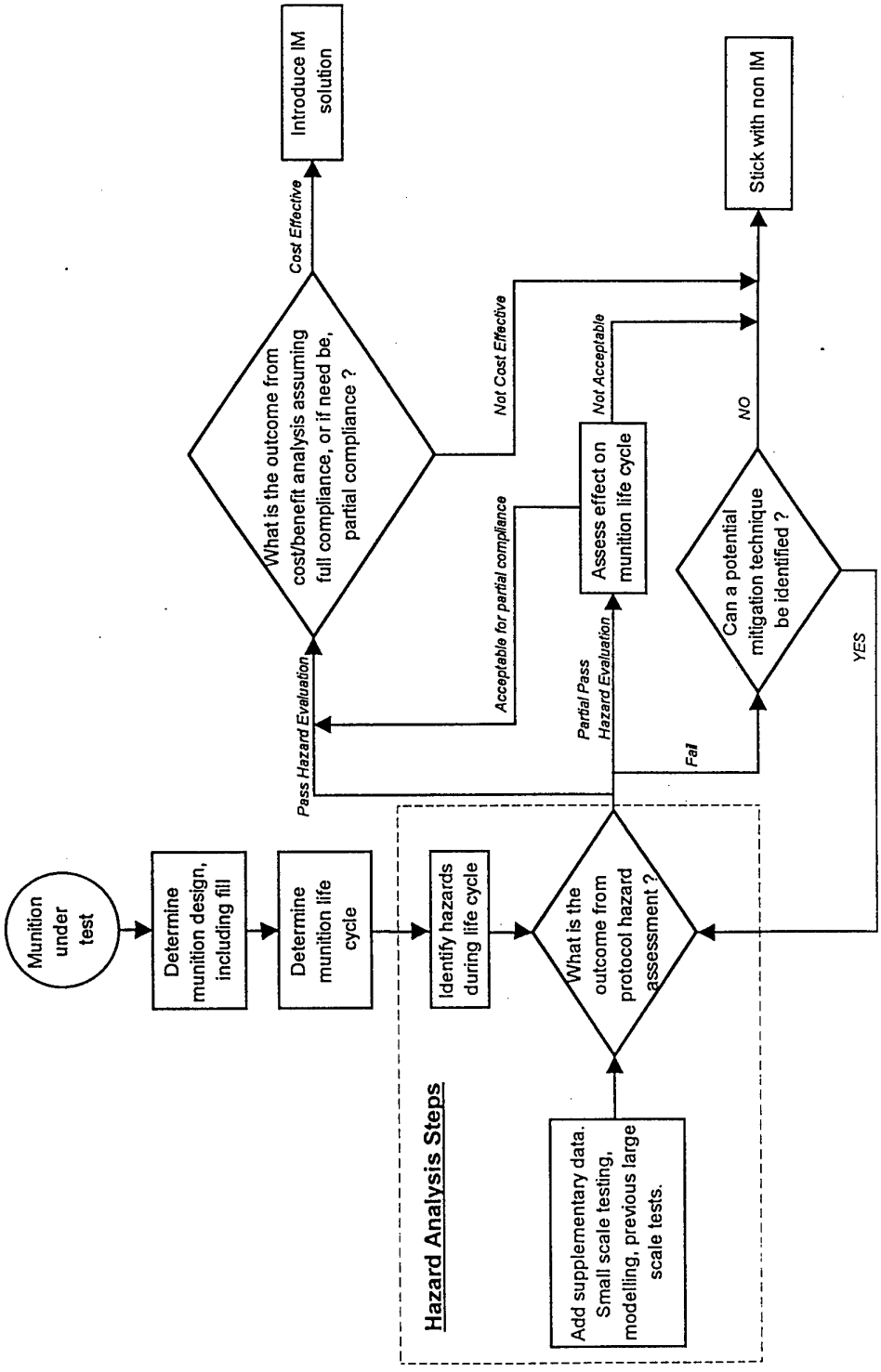

Figure 2: Proposed Use of Hazard Protocols in Insensitive Munition Implementation Strategy.

Table 1: Important Small Scale Test Data Required for Shaped Charge Jet Protocol Applications

TYPE OF DATA REQUIRED	WHEN/WHERE REQUIRED IN PROTOCOL PROCESS	AVAILABLE TESTS
Critical detonation diameter of filling	Initial stage of flow charts, transition from impact to bow wave initiation	Detonation propagation in normal and tapered cylinders
Impact shock sensitivity of filling	Related to use of $V_j^2 d_j = K_t$	Jet impact tests, gap test data helpful
Bow wave shock sensitivity of filling	Relates to use of $Up^2 d_j$ or $V_j^2 d_j = K$	Bow wave shock sensitivity, gap test data doubtful
Propensity for filling to DDT	Where confinement determines outcome from low order reaction	RARDE burning tube test
Hugoniot data for jet, case and filling materials	Impact shock on case and transmission to filling, jet penetration bow wave shock pulse	Several methods
Bulk sound velocity of filling	Jet penetration bow wave shock pulse	From Hugoniot data, etc.
Run to detonation of filling	Bow wave shock, not impact shock, large diameter subsonic bow wave	Insufficient information to assess appalicability of wedge test, etc., selected data available

2.3 Status

Protocols have been prepared for all five threat areas; these protocols should not be considered as complete, but as 'snapshots in time', encompassing our knowledge to date. Specifically, the shaped charge jet protocol is the most advanced, reflecting an understanding of many of the fundamental mechanisms associated with the hazard. The bullet/fragment impact and ESD protocols are also well developed, although there are some significant issues still be to be resolved, for example an understanding of the unknown reactions that transition to detonation (XDT) (which is a potential outcome in the protocols). Finally, the cookoff and mass reaction protocols are the least advanced of the five. The final meeting of WAG-11 occurred in 1993 and the final output was produced as an executive summary in 1993 [9] with separate monographs on each of the five hazards to follow [10,11].

The XDT phenomenon and the cookoff threat were identified by WAG-11 as two key priority deficiencies. As a result, these two topics were selected as the subject for further investigation under TTCP Subgroup W Technical Panel 4 (WTP-4).

It is emphasised that the hazard protocols are evolutionary and science based, thus their degree of maturity is dependent on our knowledge of the underlying processes of the stimulus/munition reaction. Hence the protocols require maintenance and further development will occur. For these reasons the protocols were transferred to a more permanent body, the NATO Insensitive Munitions Information Center (NIMIC), in 1994.

Results from TTCP and other investigations will continue to flow into NIMIC and be incorporated into the protocols. For its part NIMIC hosts workshops and meetings to stimulate improvements to the protocols and the supportive data bases. Also NIMIC is incorporating the protocols into PC based, user friendly software for ready access. These aspects of NIMIC's activities are specifically designed to benefit its member nations, which includes Australia, in developing strategies for reducing munition vulnerability.

3. Benefits of the Protocol Approach

An important benefit of the protocol approach is that it highlights the steps in the decision tree that have a lack of supporting information or knowledge of the underlying physical processes. Some of these technology gaps will be more important than others. Hence the protocol can be used to select the key areas for research and investigation and therefore to assist program managers in deciding the priority areas for the allocation of resources. As an example, Table 2 lists the key technology gaps for the shaped charge jet impact hazard.

The value of the protocol approach is that it can be applied in the early stages of weapon design or modification, to assist the evaluation of proposals for the mitigation of hazards and as a means of evaluating candidate weapons in a purchasing strategy. Thus the capability of the smart buyer is enhanced by allowing a desk-top audit of the potential hazards of contenders in a weapons purchasing strategy. While the protocols will never eliminate the need for experiments, much of the required information can be obtained from small scale tests. Ultimately, when sufficiently mature, protocol assessments coupled with supporting small scale test data will limit costly full scale testing and be relied upon as an effective prediction of munition response. Some parts of the protocol approach have been applied to the following US systems: Harpoon, Sidewinder, AMRAAM, Maverick, Hellfire, Tacit Rainbow, CATFAE, Mk 82 bomb replacement, AAWS-M (Martin-Marietta) and the High Performance Magazine.

Table 2: Major Technology Gaps for the Shaped Charge Jet Impact Hazard

- assess particulated jet initiation of covered energetic fillings
- quantify jet diameter/minimum detonation diameter/detonation corner turning relationship
- large diameter jet initiation
- quantity effect of cover thickness on jet impact initiation
- specialised energetic filling initiation characteristics
- develop theoretical/numerical models for jet initiation (long term objective)

4. Protocol Relevance to Insensitive Munition Development

The protocol approach is a particularly relevant tool for the evaluation of Insensitive Munitions (IM) where reduced vulnerability is required but without a loss in performance. Thus a combination of the protocol decision tree and the selected small scale test data may be used in the early stages of IM development for the screening of candidate fills. A suggested role for the protocol in an IM implementation strategy is shown in the chart in Figure 2. In this proposal the munition design under evaluation is assessed for the likely life cycle hazards. Each of these hazards is subsequently evaluated using the protocol approach. The degree of IM compliance can therefore be estimated for each candidate design change for feeding into the cost/benefit decision making process. Note that the approach allows for an assessment of partial IM compliance, e.g. overcomes the major identified hazard but not the less important minor hazards.

5. Conclusion

The protocol approach to hazard assessment has been shown to offer a wide range of benefits over the traditional pass/fail test. Importantly, the approach concentrates on evaluating why a particular response was obtained and how close the response was to the pass/fail level (i.e. an indication of the margin of error).

It makes the application of small scale testing much more efficient by showing what, why, when and how the data should be applied to the munition under evaluation.

The tests are more realistic in predicting weapon responses to a particular stimulus and consequently place less emphasis on full scale testing with benefits in reduced lead times and costs. Since the protocols are built up from and utilise the available science and technology of the stimulus/munition interaction, they identify technology gaps, advise the analyst on which gaps are critical and tell the program manager which work to support. Clearly the protocols are particularly relevant to IM development and evaluation and a suggested strategy for this purpose is included in the paper.

The universal nature of the protocol allows their application to the development of multinational weapons and provides purchasing nations with an additional "smart buyer" tool.

6. Acknowledgements

This paper is a consequence of the endeavours of the group of experts who contributed to TTCP WAG-11 under chairmanship of Thom Boggs and Dr Charles Dickinson.

7. References

1. AOC Proc., 188.91, 5 February 1991.

2. Defence Instruction (General), DI(G), LOG 07-10, Insensitive Munitions, 10 November 1993.

3. T.L. Boggs, A.I. Atwood, K.J. Graham, A.H. Lepie, C.F. Price, H.P. Richter and D.E. Zern, "Hazards of Solid Rocket Propellants", Proceedings of the Eastern States Combustion Institute; Physical and Chemical Processes in Combustion, Philadelphia, Pa, 1985.

4. T.L. Boggs and C.W. Dickinson (editors), "Summary Reports on TTCP WAG-11 Workshops", 1987, 1988, 1989, 1990, 1991, 1992.

5. T.L. Boggs, C.W. Dickinson, L.M. Barrington, C. Belanger and P. Haskins, "Hazards of Energetic Materials and Their Relation to Munitions Survivability", Proceedings of ICT Conference, Karlsruhe, Germany, 1991

6. M.C. Chick and R.B. Frey, "Towards a Methodology for Assessing the Terminal Effects of a Jet Strike on Munitions", Proceedings of 12th International Symposium on Ballistics, Texas, USA, 1990.

7. J. Covino, B. Hammant, D.R. Dreitzler, R.J. Lee and D.G. Tasker, "Electrostatic Discharge Hazards", Naval Weapons Centre report NWC TP 7193, 1991.

8. T.L. Boggs and R.L. Derr (Editors) "Hazard Studies for Solid Propellant Rocket Motors", NATO Advisory Group for Aerospace Research and Development, AGARDograph No. 316, 1990.

9. TTCP Subgroup W, Action Group WAG-11, Final Report, Volume I, Executive Summary, November 1994.

10. TTCP Subgroup W, Action Group WAG-11, Final Report, Volume III, "Bullet/Fragment Impact Monograph", November 1994.

11. Ibid, Volume VI, "Sympathetic Detonation Monograph", November 1994.

12. M. Chick, I.B. Macintyre and R.B. Frey, Eighth Symposium (International) on Detonation, USA, NSWC MP86-194, 1985.

13. R. DiPersio and J. Simon, BRL Memo Report No. 1542, 1964.

14. R. DiPersio, W.H. Jones, A.B. Merrendino and J. Simon, BRL Memo Report No. 1986, 1967.

15. M. Chick and D.J. Hatt, Seventh Symposium (International) on Detonation, USA, NSWC MP 82-334, 1981.

16. M. Chick, T.J. Bussell, R.B. Frey and A. Bines, Ninth Symposium (International) on Detonation, USA, 1989.

17. H.R. James, J. Ener. Mat,., Vol. 7, 1989.

18. M. Held, Explosivestoff 5, 98, 1968.

19. W.J. Dixon and A.M. Mood, American Statistical Ass., Vol 43, 109-126, 1948.

Appendix A
Example of Protocol Application

A1. Introduction

Our example is based on the protocol developed to assess the effect of shaped charge jet impact on explosive filled ordnance. It was selected as a consequence of Australia leading the development of the shaped charge jet protocol for TTCP WAG-11 and undertaking a test example. The approach was to assess the ability of the protocol to predict the outcome from firing a shaped charge jet through a variable length water column at an explosive assembly that simulates a Mk 82 bomb in its seamine configuration. A quantitative form of the protocol was able to be developed for the application since jet penetration equations and detonation threshold criteria are available to determine the progress of the jet through the test ordnance. Two impact positions were selected to represent the situations where the jet either encounters a continuous column of explosive or the void in the filling produced by the contraction of the explosive during casting. Since voids sensitize explosive fillings to shaped charge jets [12], the two tests were expected to produce significantly different water standoff distances for the deflagration/detonation threshold.

The ability of the protocol model to recognise the significant sensitizing effect of voids on jet impact on ordnance systems was selected for the validation test since the outcome is measurable and the pathways through the decision tree are quite different for the two jet impact positions.

A.2 Summary of Protocol Predictive Model

The model is built up from 3 elements: these are, (a) the decision tree flow chart, (b) explosive initiation criteria and small scale testing data, and (c) jet penetration equations. The protocol decision tree considers the successive stages of the jet impact and penetration of a munition system and considers whether the various shocks or stimuli created breach the detonation or violent reaction threshold or not. The decision tree is in 4 parts. The first part (Figure 3) deals with the type of system impacted by the jet; it has been divided into 3 categories depending on the mechanisms whereby the jet initiates reaction in the energetic filling. The three categories are: thick cased solid energetic materials (Figure 4), thin cased or bare solid energetic materials (Figure 5) and propellant beds (not included in this study).

The penetration of the jet through the system was calculated using the analysis and penetration equations developed by Dipersio, Simon and Merendino [13,14]. These equations cover jet penetration before breakup, penetration occurring while jet breakup occurs and jet breakup before the start of penetration. The detonation threshold criteria are defined by the jet characteristics (velocity, diameter, density) [15-18]. Initiation mechanisms which do not determine the detonation threshold are not required to be included, e.g., initiation from the propagation of the jet penetration bow wave shock in the cover into the energetic material.

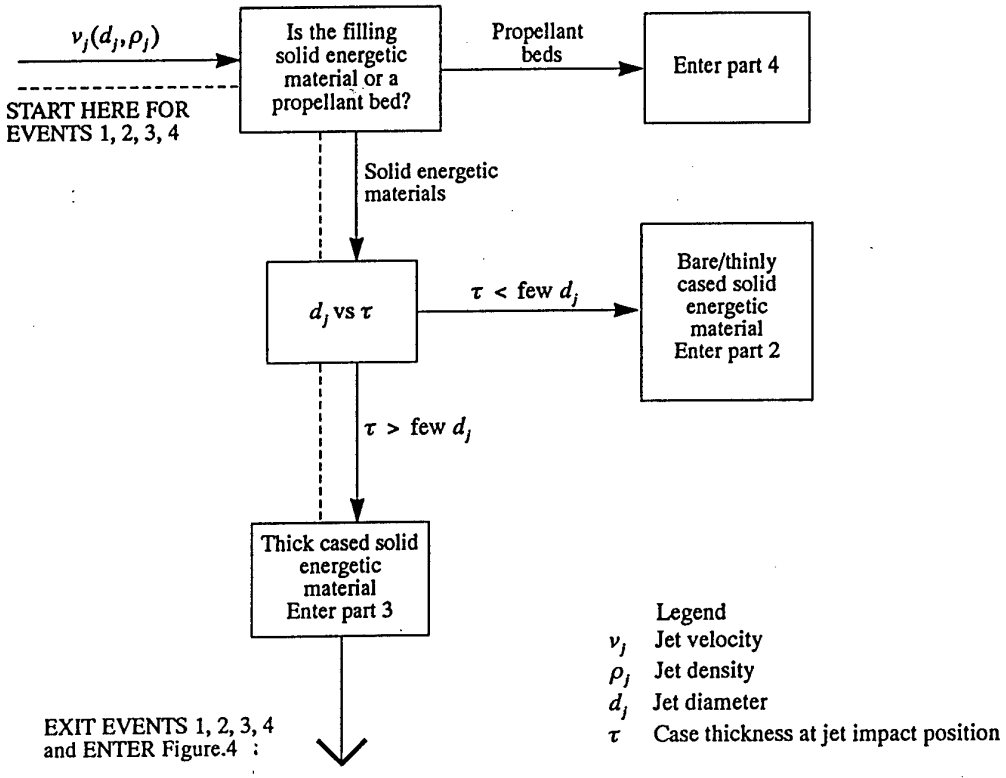

Figure 3: Proposed Jet Hazard Protocol Flow Chart Part 1.

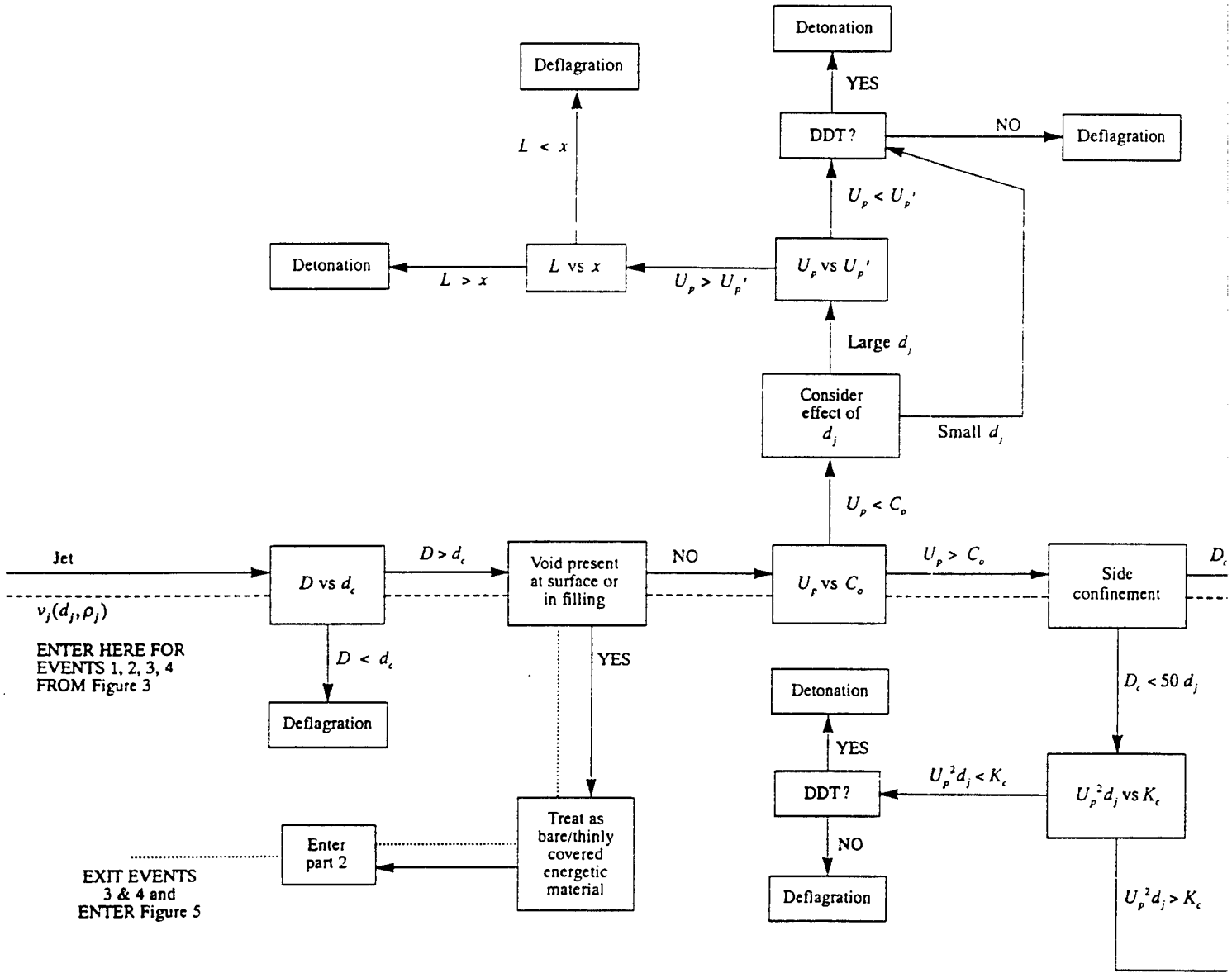

Figure 4: Proposed Jet Hazard Proiocol Flow Chart, Part 3 Medium

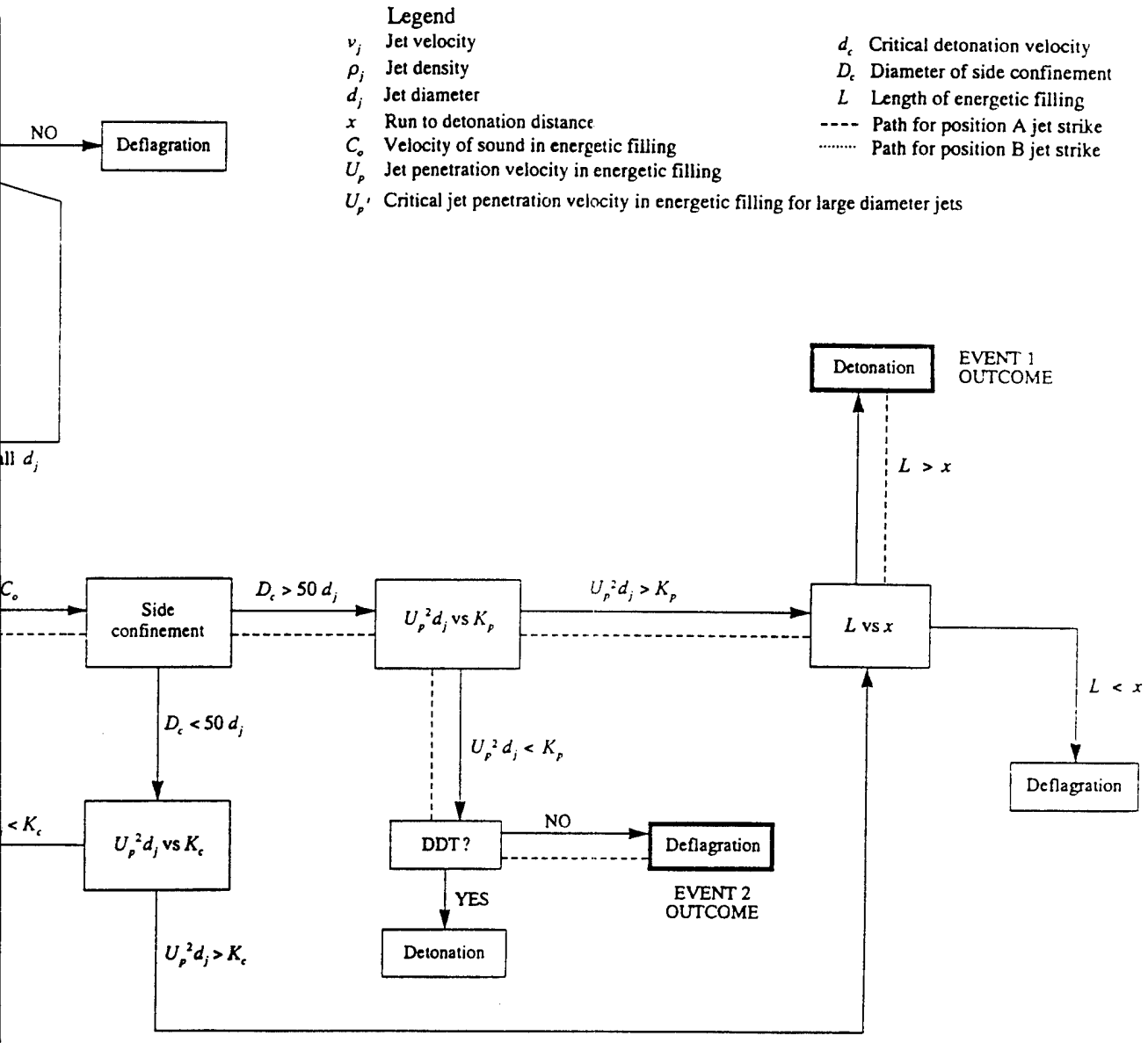

Flow Chart, Part 3 Medium and Thick Cased Fillings.

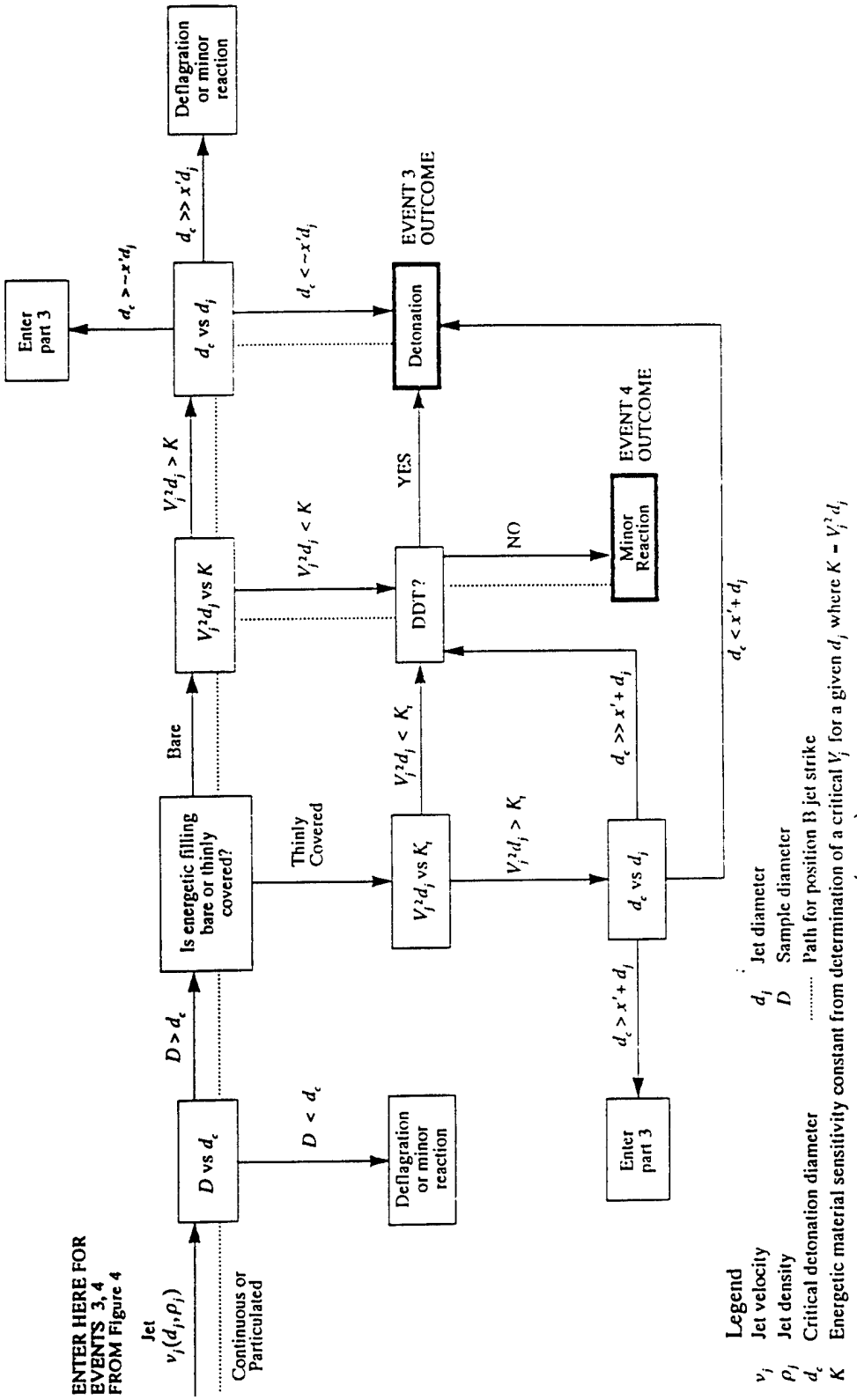

Figure 5: Proposed Jet Hazard Protocol Flow Chart, Part 2 Bare or Thin Cased Fillings.

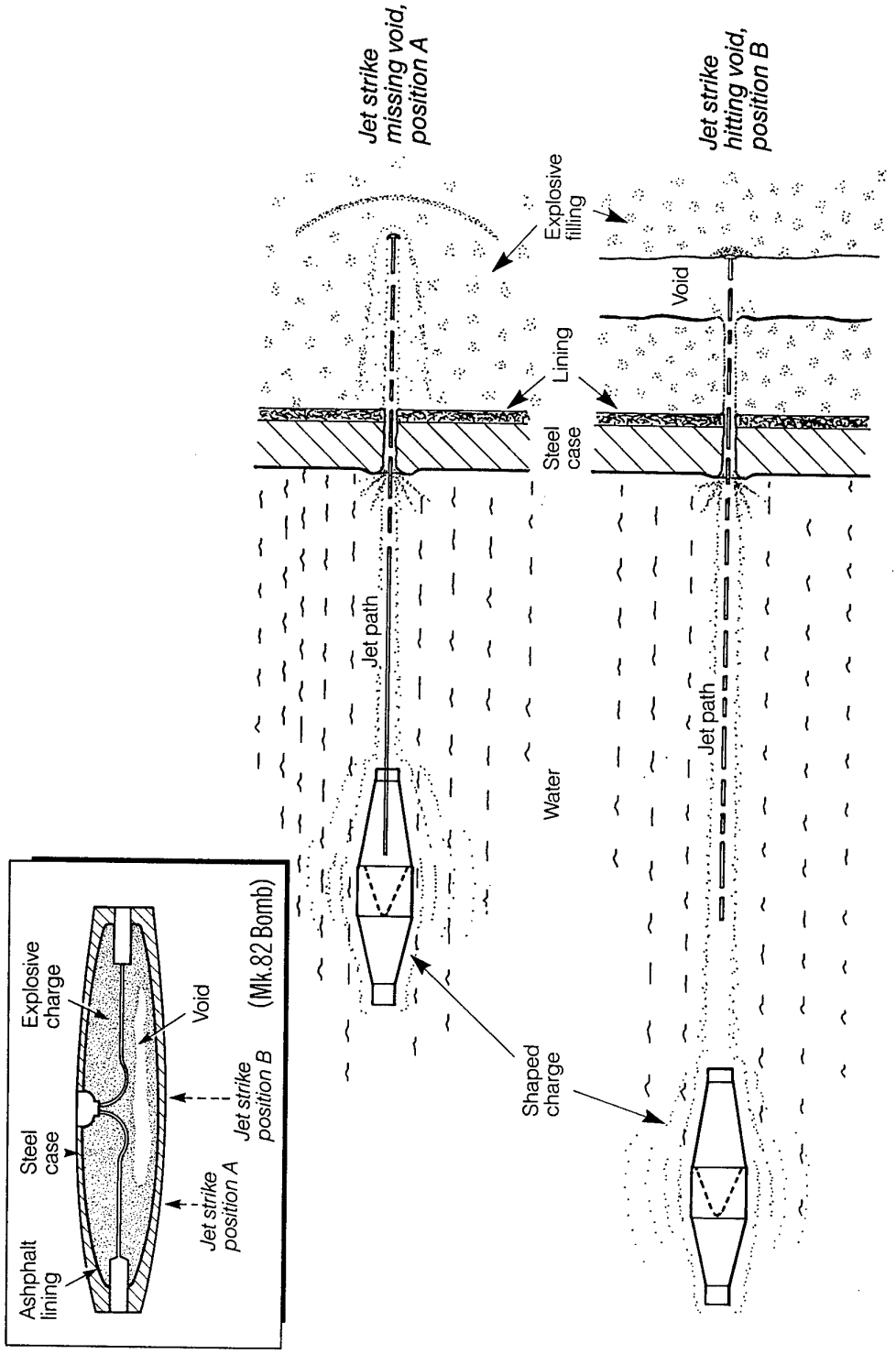

Figure 6: Diagramatic Representation of Tests to Verify Shaped Charge Jet Impact Protocol.

A.3 Experimental Test Set-Up

The protocol was tested by comparing model predictions with experimental measurements of the water column thickness that the jet could penetrate and detonate or deflagrate the explosive filling assemblies that simulated the cross section of a Mk 82 bomb. Testing considered two jet impact positions on the Mk 82 bomb; these are shown in the inset diagram in Figure 6. Position A was selected so that the jet penetrated a continuous column of explosive after penetrating the case and liner. Position B was selected so that the jet hit the large void in the filling after penetrating the case and liner. Such voids are formed in the Mk 82 bomb by the contraction of the explosive during solidification in the casting process. (For many materials the critical jet velocity for impact detonation on the far side of void surfaces can be 40-50% lower than that for thickly covered energetic fillings where no void is present and jet penetration bow wave initiation is the determining mechanism). The experimental set-up is shown diagrammatically in Figure 6 and represents the cross section through a Mk 82 bomb in its seamine configuration. The shaped charge used was a 66 mm M72 LAW warhead which contains a conventional copper liner.

The variable length water column was housed in a plastic tube. The case and asphalt liner were simulated by 12 mm thick steel and 5 mm thick plexiglas discs respectively. Plexiglas was selected as a substitute for asphalt on the basis of its well documented physical and shock properties. The filling in the assemblies of the Mk 82 bomb was H-6. The type of event from each shot was assessed from the witness block indentation and reaction excess transit time measurements through the H-6 explosive filling.

The explosive filling for the Position A (Figure 6) jet impact experiments was H-6 of dimension 100 mm diameter by 150 mm in length while that for Position B (Figure 6) was the same diameter but the longitudinal sequence was 25 mm H-6/25 mm air space/50 mm H-6. The length of the water column for the initial shot for both the A and B configurations was based on the prediction from the protocol model for the detonation/deflagration threshold. Thereafter the length of the water column was reduced if the previous result was a deflagration or increased if the previous result was a detonation. The results were analysed by the method of Dixon and Mood [19] to give a mean water column length for the detonation/deflagration threshold of the H-6.

A.4 Discussion of Protocol Model and Test Results

Table 3 compares the predictions from a semi-empirical form of the shaped charge protocol decision tree to experimental measurements of the mean length of the water column that the jet from the shaped charge can penetrate for the detonation/deflagration threshold of the simulated Mk 82 bomb assemblies. Note that other hazard protocols are not available in a semi empricial form for quantitative assessments of munition/hazard outcomes.

Table 3: Comparison of Predicted to Experimental Water Standoff Distance for the Detonation Threshold of H-6 Mine Filling

Set-up	Jet Impact Position See Figure 6	Model Prediction mm	Experimental Result $M_{50\%}$ mm
Mk-82 Bomb Simulation, H-6 No Void	A	386	383
Mk 82 Bomb Simulation, H-6 Void	B	700	525

The general pattern of results in Table 3 shows there is a good correlation between protocol model predictions and the experimental determinations. Thus the model correctly forecasts the significantly greater water column length result stemming from the sensitizing effect of the void, i.e. jet impact Position B results relative to those for Position A. There is also excellent correspondence between the model prediction and the experimental result for the short water column length for jet impact at Position A where no void is present. The high value for the model prediction compared to the experimental result for jet impact Position B is attributed to the physical state of the jet. Thus, although the model takes into account that the jet has broken up at these standoff distances it does not consider the effects of the instabilities due to the jet particles wandering off course and tumbling. These instabilities decrease the jet penetration characteristics and thus its ability to initiate standoff detonation of the filling.

The protocol decision tree can be used to trace the jet path through the Mk 82 bomb cross section and show how the various events were obtained. Thus we observed 4 different types of event. These were a detonation (designated a type 1 Event see Figure 4) and a deflagration (designated a type 2 Event) for the Position A impact and detonation and deflagration for the Position B impact (designated Event types 3 and 4 respectively).

For both impact positions the jet path follows the dashed line through Figure 3 and exits to Figure 4 (i.e. we are dealing with a thick cased munition with a solid energetic filling). At the "void" decision box in Figure 4 the dashed line continues to represent the path taken by the jet for the Position A impact (which does not encounter the void in the explosive) while the dotted line follows the new course taken by the Position B impact as a result of hitting the filling contraction void and enters Figure 5.

For both type of Position A events the difference in the outcome in Figure 4 depends on whether the jet penetration bow wave initiation value of $U_p^2 d_j$ (where U_p is the jet penetration velocity and d_j is the jet diameter) is greater or less than the detonation threshold criteria, K, for H-6 determined from scaled testing. Note that the side confinement can be neglected and the sample thickness is greater than the run to detonation distance.

A file is maintained of experimentally determined K constants for explosive fillings and the model compares these to the calculated values. Thus for Event 1 the jet velocity was greater than the critical value (for constant d_j) and hence the round detonated whereas in Event 2 the jet velocity was subcritical and a deflagration was recorded; the lack of side confinement is not conducive to supporting a deflagration to detonation transition.

For Events 3 and 4 from impact position B the jet path exits Figure 4 after the "void" box and enters Figure 5. The two different outcomes are dependent on whether the jet impact initiation value of $V_j^2 d_j$ (where V_j is the jet velocity) is greater or less than the detonation criteria K_t for H-6 determined from scaled testing. Note there is no critical diameter effect. Again, as for K, a file is maintained of experimentally determined values of K_t, which is called up and compared to the calculated value for conditions of the test. Thus for Event 3 the jet velocity was greater than the critical value and hence a detonation was predicted and for Event 4 the jet velocity was subcritical and a deflagration occurred. The run to detonation distance is not considered since jet impact initiation either occurs within several millimetres or not at all.

Thus we conclude that tests using assemblies that simulate cross-sections of the Mk 82 bomb in its seamine configuration give good quantitative agreement with protocol model predictions for shaped charge jet impacts. The protocol decision tree network was able to show the paths taken by the jets through the munition to produce the 4 different types of event observed.

A protocol approach for the assessment of munitions hazards

M. Chick and L. Barrington

AUSTRALIA

DEFENCE ORGANISATION

S&T Program

Chief Defence Scientist
FAS Science Policy
AS Science Industry and External Relations
AS Science Corporate Management
} shared copy

Counsellor Defence Science, London (Doc Data Sheet)
Counsellor Defence Science, Washington(Doc Data Sheet)
Scientific Adviser to MRDC Thailand (Doc Data Sheet)
Senior Defence Scientific Adviser/Scientific Adviser Policy and Command (shared copy)
Navy Scientific Adviser (3 copies Doc Data Sheet and one copy of the distribution list)
Scientific Adviser - Army (Doc Data Sheet and distribution list only)
Air Force Scientific Adviser
Director Trials
Australian Ordnance Council, President

Aeronautical and Maritime Research Laboratory
Director

Electronics and Surveillance Research Laboratory
Director

Chief of Weapons Systems Division
Mr M. Chick
Ms L. Barrington

DSTO Library
Library Fishermens Bend
Library Maribyrnong
Library DSTOS (2 copies)
Australian Archives
Library, MOD, Pyrmont (Doc Data sheet)

Forces Executive

Director General Force Development (Sea), (Doc Data Sheet)
Director General Force Development (Land)
Director General Force Development (Air), (Doc Data Sheet)
DARMENG-N, CP2-6-08

e. **Army**

ABCA Office, G-1-34, Russell Offices, Canberra (4 copies)
SO (Science), HQ 1 Division, Milpo, Enoggera, Qld 4057 (Doc Data Sheet only)

NAPOC QWG Engineer NBCD c/- DENGRS-A, HQ Engineer Centre
Liverpool Military Area, NSW 2174 (Doc Data Sheet only)

S&I Program
Defence Intelligence Organisation
Library, Defence Signals Directorate (Doc Data Sheet only)

B&M Program (libraries)
OIC TRS, Defence Central Library
Officer in Charge, Document Exchange Centre (DEC), 1 copy
*US Defence Technical Information Centre, 2 copies
*UK Defence Research Information Centre, 2 copies
*Canada Defence Scientific Information Service, 1 copy
*NZ Defence Information Centre, 1 copy
National Library of Australia, 1 copy

UNIVERSITIES AND COLLEGES

Australian Defence Force Academy
Library
Head of Aerospace and Mechanical Engineering
Deakin University, Serials Section (M list)), Deakin University Library
Senior Librarian, Hargrave Library, Monash University
Librarian, Flinders University

OTHER ORGANISATIONS

NASA (Canberra)
AGPS

OUTSIDE AUSTRALIA

ABSTRACTING AND INFORMATION ORGANISATIONS
INSPEC: Acquisitions Section Institution of Electrical Engineers
Library, Chemical Abstracts Reference Service
Engineering Societies Library, US
American Society for Metals
Documents Librarian, The Center for Research Libraries, US

INFORMATION EXCHANGE AGREEMENT PARTNERS
Acquisitions Unit, Science Reference and Information Service, UK
Library - Exchange Desk, National Institute of Standards and Technology, US

ADDITIONAL DISTRIBUTION
NIMIC, NATO HQ, 1110 Brussels, Belgium

SPARES (10 copies)

Total number of copies: 57

DEFENCE SCIENCE AND TECHNOLOGY ORGANISATION DOCUMENT CONTROL DATA	1. PAGE CLASSIFICATION UNCLASSIFIED 2. PRIVACY MARKING/CAVEAT (OF DOCUMENT)

3. TITLE	4. SECURITY CLASSIFICATION (FOR UNCLASSIFIED REPORTS THAT ARE LIMITED RELEASE USE (L) NEXT TO DOCUMENT CLASSIFICATION)
A protocol approach for the assessment of munition hazards	Document (U) Title (U) Abstract (U)

5. AUTHOR(S)	6. CORPORATE AUTHOR
M. Chick and L. Barrington	Aeronautical and Maritime Research Laboratory PO Box 4331 Melbourne Vic 3001

7a. DSTO NUMBER	7b. AR NUMBER	7c. TYPE OF REPORT	8. DOCUMENT DATE
DSTO-GD-0066	AR-009-432	General Document	October 1995

9. FILE NUMBER	10. TASK NUMBER	11. TASK SPONSOR	12. NO. OF PAGES	13. NO. OF REFERENCES
510/207/0125	DST 93/101	DST	25	19

14. DOWNGRADING/DELIMITING INSTRUCTIONS	15. RELEASE AUTHORITY
To be reviewed three years after date of publication	Chief, Weapons Systems Division

16. SECONDARY RELEASE STATEMENT OF THIS DOCUMENT

Approved for public release

OVERSEAS ENQUIRIES OUTSIDE STATED LIMITATIONS SHOULD BE REFERRED THROUGH DOCUMENT EXCHANGE CENTRE, DIS NETWORK OFFICE, DEPT OF DEFENCE, CAMPBELL PARK OFFICES, CANBERRA ACT 2600

17. DELIBERATE ANNOUNCEMENT

Announcement of this report is unlimited

18. CASUAL ANNOUNCEMENT YES/NO (Cross out whichever is not applicable)

19. DEFTEST DESCRIPTORS

Insensitive munitions; Hazard assessment; Hazardous stimuli; Munition hazards

20. ABSTRACT

We describe and illustrate a methodology (or protocol) for assessing the response of munitions to unwanted hazardous stimuli. The approach has resulted from an international collaboration of scientists representing the US, UK, Canada and Australia. Protocols are being devised for the following hazards; cookoff, bullet/fragment impact, shaped charge jet impact, mass detonation and electrostatic discharge. Each protocol is science based and contains a logical decision tree that utilises a hierarchy of small scale test data. The decision tree flow chart leads the user through an ordered, step by step process that assesses the effect of the selected stimulus as it passes through the munition. It shows what information is needed and in what order and is not just a pass/fail test. The protocol approach can examine new weapon designs and candidate purchases to anticipate potential hazard problems as well as ways to mitigate the hazards with existing weapons. Hence it offers an important tool to assist with the bottom line of Insensitive Munition development, i.e., predicting munition vulnerability and hence an assessment of platform vulnerability. The approach is illustrated by an example.